DIAMANTBOORMACHINE A-1811

09-01-2017	Page 1 of 3	Article No.	AMB1811000

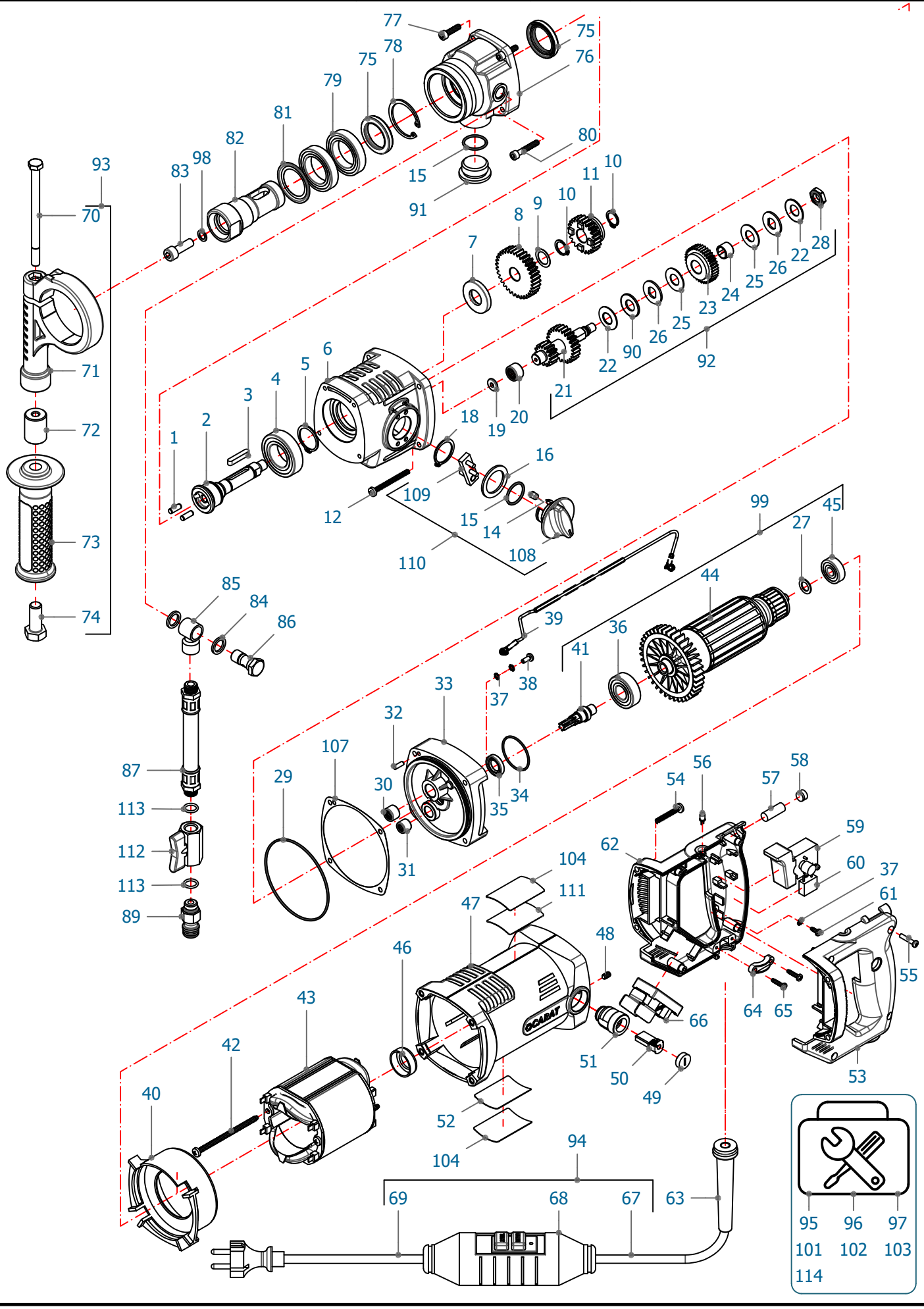

Copyright to all intellectual property, images and text, within this drawing belongs to the creator of this document and may not be reproduced or used for any commercial purposes whatsoever without written permission.

DIAMANTBOORMACHINE A-1811

09-01-2017 | Page 2 of 3 | Article No. AMB1811000

PARTS LIST

ITEM	QTY	PART NUMBER	DESCRIPTION	REVISION DATE
1	2	F6PG14	Parallel Pin	
2	1	N18021	Main Shaft	
3	1	F6R228	Parallel Key	
4	1	EA050A	Bearing	
5	1	FR025	Spring Retaining Ring	
6	1	N18020	Gear Box	
7	1	E3073	Shaft Seal Ring	
8	1	N18003	Gear	
9	1	FS14P2	Shim-ring	
10	2	FR014	Spring Retaining Ring	
11	1	N18005	Gear	
12	4	FF1450	Pan Head Tapping Screw	
14	2	F42605	Spring Plunger	
15	2	E4021B	O-Ring	21-12-2005
16	1	FS25P2	Shim-ring	
18	1	FR024	Spring Retaining Ring	
19	1	EN0105	Needle Bearing	
20	1	EB015A	Needle Bearing	
21	1	N18004	Gearshaft	21-12-2005
22	2	FR525	Disc Spring	21-12-2005
23	1	N14005	Clutch gear	
24	1	ES012A	Sliding Bush	21-12-2005
25	2	N14006	Clutch Washer	21-12-2005
26	2	N14007	Lock Washer	21-12-2005
27	1	FS10P2	Shim Ring	
28	1	FM10S1	Locking Nut	
29	1	E4084A	O-Ring	
30	1	EB012A	Needle Roller Bearing Drawn Cup	
31	1	EB008A	Needle Roller Bearing Drawn Cup	
32	1	F6Q112	Parallel Pin	
33	1	N18008	Gearbox Cover	
34	1	E4035A	O-Ring	
35	1	E30A05	Shaft Seal Ring	
36	1	EA028F	Bearing	
37	3	FV04TV	Toothed Lock Washer	23-04-2007
38	1	FZ4110	Pan Head Screw	
39	1	N18055	Earth Cable	
40	1	N14010	Aircover	
41	1	N14012	Pinion Gear	
42	2	FF1485	Pan Head Tapping Screw	
43	1	N18013	Stator 1800 Watt - 220V	
44	1	N18014	Armature 1800 Watt (230V)	
45	1	EA007D	Bearing	
46	1	N14011	Bearing Cup	
47	1	N18009CN	Motor Housing Carat	
48	2	FIK0510	Hexagon Socket Set Screw	
49	2	N14022	Brushholder-Cap	
50	2	N14021	Brush	
51	2	N14020	Brushholder	
52	1	N18083	Serial Plate A-1811	
53	1	N14016	Grip Left Cover	
54	4	FF1432	Pan Head Tapping Screw	
55	4	N14040	Tapping Screw EJOT	
56	1	N14032	LED	
57	1	N14034	Tube Air Level	
58	1	N14035	Air Level	
59	1	N14030	Switch (8A)	
60	1	N14033	Condensator	

Copyright to all intellectual property, images and text, within this drawing belongs to the creator of this document and may not be reproduced or used for any commercial purposes whatsoever without written permission.

DIAMANTBOORMACHINE A-1811

PARTS LIST

ITEM	QTY	PART NUMBER	DESCRIPTION	REVISION DATE
61	1	FQ2408	Pan Head Tapping Screw	
62	1	N14015	Grip Right Cover	
63	1	N14023	Cable hose	
64	1	N14024	Cable Clamp	
65	2	N14039	Tapping Screw EJOT	
66	1	N18010	Motor Control 1800 Watt	
67	1	N18051	Electrocable	
68	1	9Q2024	Personal Safety Switch	
69	1	N18050	Electrocable	
70	1	FC0820	Hex-Head Bolt	
71	1	N18032	Clampring Ø60	
72	1	N14026	Clamp Shaft	
73	1	N14027	Grip	
74	1	FB2030	Hex-Head Bolt	
75	2	E30A28	Shaft Seal Ring	
76	1	N18022	Exchange Housing	
77	2	FBC720	Cylinder Head Cap Screw	
78	1	FR140	Spring Retaining Ring	
79	2	EA057A	Bearing	
80	2	FBC730	Cylinder Head Cap Screw	
81	1	EXR100	Metal Shield	
82	1	N18031	Main Shaft G1/2"	
83	1	FBC025	Hexagon Socket Head Cap Screw	
84	2	F45240	Swivel Seal Ring	
85	1	F45241	Swivel	
86	1	F45242	Swivel shaft	
87	1	N14081	Waterhose	23-04-2007
89	1	F2015	GARDENA Adapter G1/4"	
90	1	FR550	Disc Spring	21-12-2005
91	1	F45626	Stop	
92	1	N18035	Gear Assembly	
93	1	N18036	Grip Assembly	
94	1	N18037	Cable Assembly incl. PRCD Black	
95	1	CAZVAMB18110	Tool Case	11-01-2017
96	1	NMHX002	Manual A-16 | A-18 | A-20 | A-22	11-01-2017
97	1	N18039	Bottle with Oil	11-01-2017
98	1	90374	Copper Sealing Ring	
99	1	N18034	Armature 1800W (assembly)	
101	1	G1005	Wrench SW27	11-01-2017
102	1	G1021	Wrench SW32	11-01-2017
103	1	G1001	Wrench SW36	11-01-2017
104	2	N140281	Serial Protection	23-04-2007
107	1	N14096	Oil Seal	15-10-2007
108	1	N18006A	Switch Knob	04-01-2008
109	1	N18007A	Switch Handle	04-01-2008
110	1	N18006C1	Switchknob Assembly 1800	09-09-2008
111	1	N140283	Indicationsticker 1st Gear Controtec	28-11-2014
112	1	F43343	Valve	11-12-2015
113	2	E4011	O-Ring	11-01-2017
114	1	NMVX002	General power tool safety warnings	11-01-2017

Copyright to all intellectual property, images and text, within this drawing belongs to the creator of this document and may not be reproduced or used for any commercial purposes whatsoever without written permission.